OPERATING INSTRUCTIONS

MEDAP
GAS-JET PUMPS

MEDAP

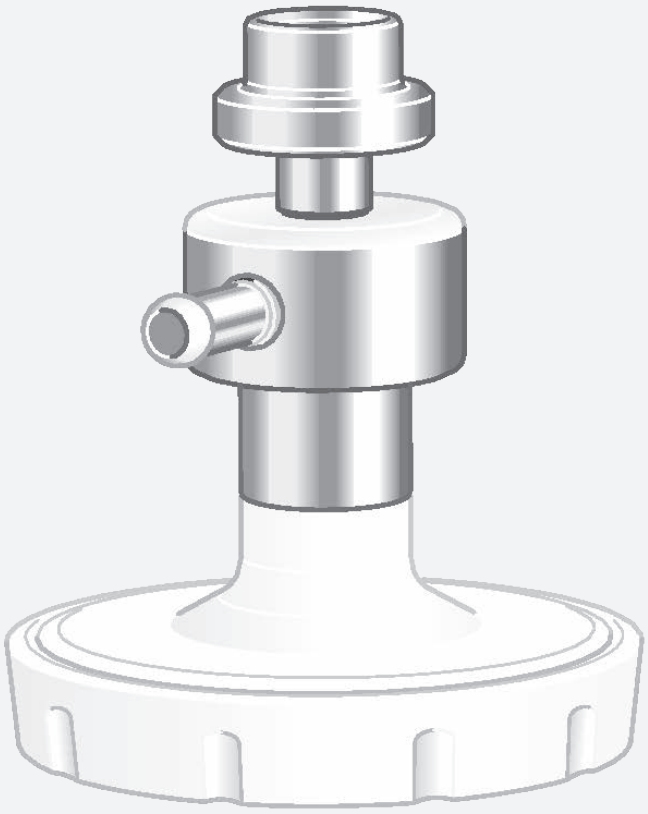

GA 5750 4196 GB 16

Subject to technical modification!

Illustrations and technical specifications may vary slightly from those in these Operating Instructions as a result of ongoing product development.

V16 2025-04

CE
0124

Table of contents

1 Introduction 5
1.1 Foreword 5
1.2 Environmental protection 5
1.2.1 Packaging 5
1.2.2 ATMOS products 5
1.3 Disposal 5
1.4 How to use these operating instructions 5
1.4.1 General 5
1.4.2 Abbreviations 5
1.4.3 Symbols 5
1.4.3.1 Cross-references 5
1.4.3.2 Actions and responses 6
1.4.4 Definitions 6
1.4.4.1 Design of safety notes 6
1.4.4.2 Design of other notes 6
1.4.5 Symbols used 7
1.5 Basic requirements 8
1.5.1 Overview of gas-jet pump 8
1.5.2 Use in accordance with the intended purpose 9
1.5.3 Applicable standards 9
1.5.4 Intended purpose 9
1.5.4.1 Possible applications 10
1.5.5 Interface description 10
1.5.5.1 General 10
1.5.5.2 Dimensions for the gas type specific connection for compressed gas 10
1.5.5.3 Fine regulator 10
1.5.5.4 Overflow protection device 11
1.5.5.5 Vacuum connection tube 11
1.5.5.6 Hydrophobic bacterial and viral filter 11
1.5.5.7 Fingertip 11
1.5.5.8 Applicator (lance, suction tip, etc.) 11
1.5.5.9 Septic fluid jar including septic fluid jar cap 12
1.5.5.10 Suction tube, Shore hardness 60 12
1.5.6 Versions 12
2 Principal safety notes 13
2.1 Principal safety notes 13

3 Initial operation 16
3.1 General 16
3.2 Equipment inspection 16
3.3 Assembly of gas-jet pump 16
3.3.1 Operation with hydrophobic bacterial and viral filter 17
3.3.2 Operation without a hydrophobic bacterial and viral filter 17
4 Operation 18
4.1 Gas-jet pump 18
4.2 Disassembly of gas-jet pump 18
4.3 Replacing the bacterial filter paper 19
5 Cleaning and disinfection 20
5.1 General 20
5.2 Cleaning 21
5.2.1 General 21
5.2.2 Cleaning procedure 21
5.3 Disinfection 21
5.3.1 General 21
5.3.2 Suitable disinfectants 22
5.3.3 Disinfection procedure 22
5.3.4 Disinfection procedures 22
5.4 Product-specific safety notes 23
6 Maintenance 24
6.1 General 24
6.2 Periodic tests 24
6.3 Malfunctions and troubleshooting 24
6.4 Repairs 25
6.5 Service hotline 25
6.6 Sending in the device 25
7 Technical specifications 26
7.1 General 26
7.2 Ambient conditions 26
7.3 Dimensions and weight 26
8 Accessories 27
8.1 Accessories 27
8.2 Consumables 27

1 Introduction

1.1 Foreword

Your facility has selected the leading-edge medical technology made by ATMOS. We sincerely appreciate the trust you have placed in us.

1.2 Environmental protection

1.2.1 Packaging

The packaging is made of materials compatible with the environment. ATMOS will dispose of the packaging materials upon request.

1.2.2 ATMOS products

ATMOS will take back used products or those which are no longer in service. Please contact your ATMOS representative for more detailed information.

1.3 Disposal



WARNING!

Disposal!

The product is used in the treatment of patients. The product or some of its components may be contaminated after use.

Clean and disinfect the product before disposal.

1.4 How to use these operating instructions

1.4.1 General

These operating instructions are provided to familiarise you with the features of this ATMOS product. They are subdivided into several chapters.

Please note:

- Please read these operating instructions carefully and completely before using the product for the first time.
- Always proceed in accordance with the information contained herein.
- Store these operating instructions in a location near the product.

1.4.2 Abbreviations

EN	European standard
EU	European Economic Community

1.4.3 Symbols

1.4.3.1 Cross-references

References to other pages in these operating instructions are identified with a double arrow symbol '⏩'.

1.4.3.2 Actions and responses

The '☒' symbol identifies an action taken by the user, while the '✓' symbol identifies the reaction that this will induce in the system.

Example:

☒ Turn on the light switch.

✓ Lamp lights up.

1.4.4 Definitions

1.4.4.1 Design of safety notes

Pictogram	Descriptor	Text
	**DANGER!** Indicates a direct and immediate risk to persons which may be fatal or result in most serious injury.	The text for the safety note describes the type of risk and how to avert it.
	**WARNING!** Indicates a potential risk to persons or property which may result in health hazard or grave property damage.	
	**NOTICE!** Indicates a potential risk to property which may result in property damage.	

Tab. 1: Design of safety notes

1.4.4.2 Design of other notes

Notes not referring to personal injury or property damage are used as follows:

Pictogram	Descriptor	Reference to
	**NOTE**	Supplementary assistance or further useful information.
	**ENVIRONMENT**	Information regarding proper disposal.

Tab. 2: Design of other notes

1.4.5 Symbols used

Symbols	Identification
CE 0124	This device complies with the relevant requirements of EU regulations.
	Consult operating instructions
	Manufacturer
	Date of manufacture Country of manufacture: Germany
MD	Medical device
UDI	Unique Device Identifier of a medical device
REF	Reference number
SN	Serial number
>ABS<	Material designation for the plastic ABS (acrylonitrile-butadiene-styrene copolymer)
	Free of oils
	Keep dry
	Keep away from sunlight
	Fragile, handle with care
	Do not open with a knife
	Temperature limit
	Humidity limitation
	Atmospheric pressure limitation

Tab. 3: Symbols

UDI application identifier

(01)	UDI-DI: Identification of the manufacturer and the device
(10)	Batch code
(11)	Date of manufacture
(21)	Serial number

Tab. 4: UDI application identifier

1.5 Basic requirements

1.5.1 Overview of gas-jet pump

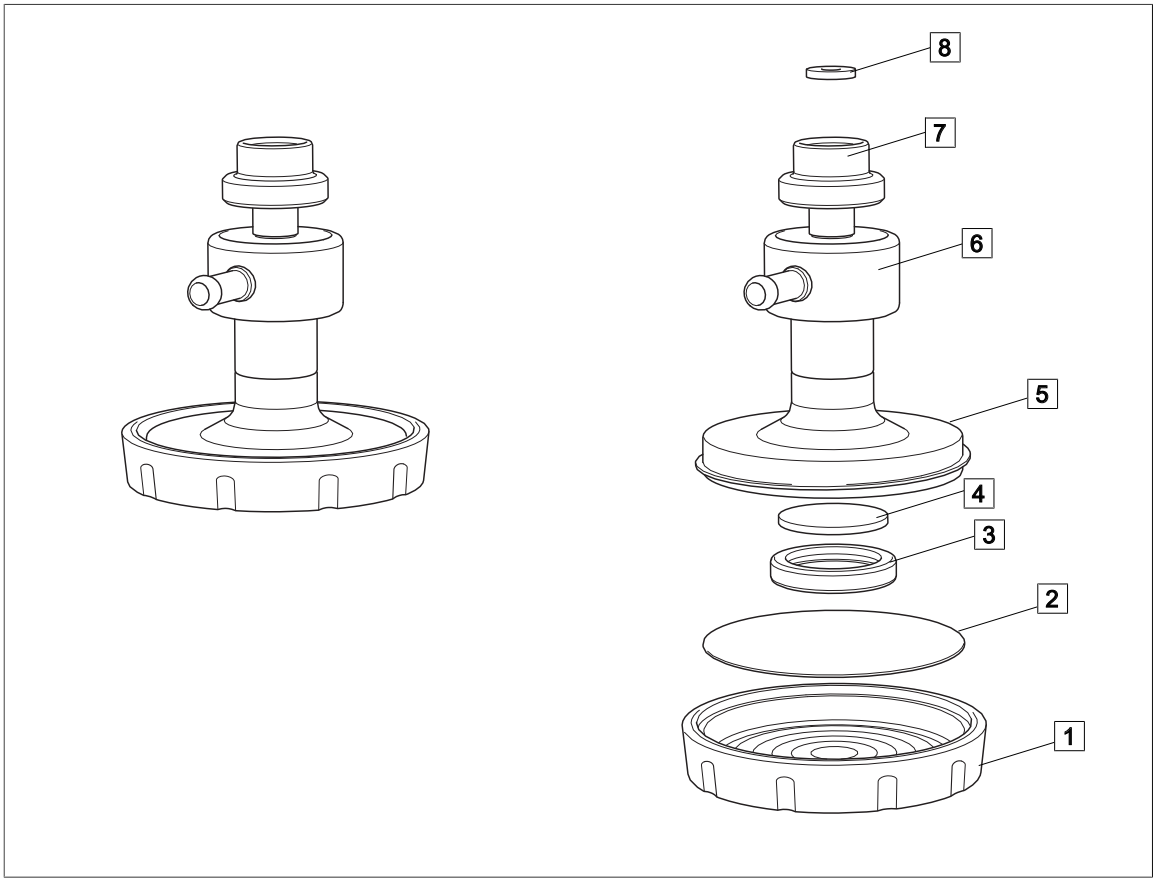

Fig. 1: Overview of gas-jet pump

1 Bacterial filter cap
2 Bacterial filter paper
3 Seal VITON
4 Sintered filter
5 Bacterial filter housing
6 Housing
7 Cap nut G3/8" (O2) / M18x1 (Air)
8 Seal

1.5.2 Use in accordance with the intended purpose

Product

As per Annex IX to the Medical Devices Directive 93/42/EEC, this product belongs to class IIa. In accordance with this directive, the product may only be used by persons who have been instructed how to use this product by an authorised person. This product is to be used exclusively for human medicine. When employed in commercial or business use, this product must be entered in the inventory.

Accessories

Accessories or combinations of accessories may be utilised only as and when indicated in these operating instructions. Other accessories, combinations of accessories and consumable items may be used only if they have a valid certification, are intended expressly for the particular use and will not adversely affect performance, the prescribed ambient conditions or safety requirements.

1.5.3 Applicable standards

The product satisfies the basic requirements set forth in Annex I to Council Directive 93/42/EEC concerning medical devices (Medical Devices Directive) as well as the applicable national (German) codes and the Medical Devices Act (MPG) in Germany.

1.5.4 Intended purpose

Name:	Gas-jet pumps
Main function:	Aspiration of secretion, blood, serous fluids, vomit and rinsing fluids along with any contained particles
Medical indications / application:	For all applications which require aspiration, e.g. general surgeries (e.g. aspiration of wound cavities, abscesses) and bronchial aspiration and where a flow rate of 32 l/min respectively 12 l/min is sufficient
Specification of the main function:	The gas-jet pump has a media-coded screw connection either to the outlet of a fine regulator for compressed air or to the outlet of a fine regulator for oxygen. The gas-jet pump converts compressed air or oxygen, respectively, into vacuum via Venturi principle. When using a version without an integrated vacuum gauge in systems with controllable vacuum, a separate vacuum gauge must be connected between the gas-jet pump and the septic fluid jar. The permissible nominal pressure is 500 kPa ± 10%. A septic fluid jar which has to be used, allows a temporary collection of the derived body fluids.
User profile:	Doctor, medically trained staff
Patient groups:	Patients of all ages
Application organ:	Natural and artificial body orifices
Application time:	Product designed for continuous operation; in practice, short-term use on the patient (< 30 days)
Application site:	The application site is the clinical environment and doctor’s practices. The product may only be applied by medically trained and instructed staff.

Contraindications:	The gas-jet pumps may not be used for: • Outside the medical sector • In MR areas • In the home care sector • Being operated directly by the patient • For vacuum extraction • For the aspiration of flammable or explosive liquids • For the aspiration of smoke that is generated during HF and laser surgery without the connection of an intermediate smoke filter • For drainages and thoracic drainages • With a supply pressure other than 500 kPa ± 10%
The product is:	Active
Sterility:	Not a sterile product
Single-use product / reprocessing:	The product and parts of the accessories are reusable. For information on reprocessing, cleaning and disinfection please see the operating instructions.

1.5.4.1 Possible applications

The gas-jet pump may be operated in combination with a fine regulator:

- Fine regulator AIR (REF HM57523708):
  The volumetric flow delivered to the gas-jet pump AIR HF/HV (REF HM57507542) is regulated by means of fine regulator AIR.
- Fine regulator O_2 (REF HM57523705):
  The volumetric flow delivered to the gas-jet pump O_2 LF/HV (REF HM57507540) is regulated by means of fine regulator O_2.

1.5.5 Interface description

1.5.5.1 General

All devices and accessories which are combined with the tapping unit must be listed in the accessories list or meet the specifications of the interface description. The configuration of the overall system as well as the functional testing are subject to the overall responsibility of the medical staff.

Functionality and suitability of the connected accessory for each intended application must be checked by the operator before every use. This includes the functionality of the connector components, its air tightness and suitability regarding material properties, working pressure and flow rate.

1.5.5.2 Dimensions for the gas type specific connection for compressed gas

The geometric gas coding for the screw connectors of the gas-jet pump depends on the product version and is in accordance with national MEDAP factory standards for AIR: M18x1; O_2: G3/8".

1.5.5.3 Fine regulator

The fine regulator is used to regulate the volumetric flow applied to the oxygen gas-jet pumps. The fine regulator is connected to a central gas supply system (CGSS) pursuant to DIN EN ISO 7396-1, DIN EN 737-3 or DIN 13260-1.

Prerequisites

- Fine regulator AIR: Thread M18x1
- Fine regulator O_2: Thread G3/8"

1.5.5.4 Overflow protection device

The mechanical overflow protection system protects the vacuum source against oversuction. If no overflow protection system is integrated in the vacuum source or suction set, a separate mechanical overflow protection must be connected between the vacuum source and the suction set.

Prerequisites

- Connections of the overflow protection system must match the inner diameter of the connection tube.

1.5.5.5 Vacuum connection tube

The vacuum connection tube is used to connect the gas-jet pump and the septic fluid jar.

Technical specifications

- Shore hardness of 60
- Inner diameter 6–7 mm
- Tube length maximum 50 cm ± 10 cm
- Vacuum resistant down to −95 kPa (must not collapse).

Prerequisites

- The inner diameter of the vacuum connection tube should match the outer diameter of the tube connector on the septic fluid jar cap of the pump.

The vacuum connection tube will be referred to only as ‘connection tube’ below.

1.5.5.6 Hydrophobic bacterial and viral filter

The hydrophobic bacterial and viral filter protects against contaminants which could be present in the form of particles or aerosols in the gas drawn in. Moreover, the hydrophobic filter serves as protection against oversuction; the filter closes off the flow of gas to the product in the event of oversuction. In its function as bacterial and viral filter, it protects the interior of the pump from the ingress of bacteria and viruses. The ATMOS product (REF HM57500630) is a hydrophobic bacterial and viral filter with a pore size of 1.0 µm (disposable article).

Prerequisites

- Pore size ≤ 1.0 µm.
- Use a bacterial filter suitable for the particular application.
- The tube connector must match the tube being used.
- Hydrophobic filter must close tightly against water passage at an absolute pressure of up to 10 kPa.

1.5.5.7 Fingertip

The fingertip serves to vent the suction tube in order to be able to quickly interrupt the aspiration process. It must be possible to sterilise the fingertip or it must be a sterilised disposable item. The outer diameter of the tube connector must match the inner diameter of the suction tube.

1.5.5.8 Applicator (lance, suction tip, etc.)

The outer diameter of the applicator connection must match the inner diameter of the suction tube; the utensil must be sterilisable or a sterilised disposable item.

1.5.5.9 Septic fluid jar including septic fluid jar cap

Low leakage; volumes of 0.7 to 5.0 l; the outer diameter of the tube connector for the vacuum source must match the inner diameter of the connection tube; it must be possible to fix the septic fluid jar securely to a support or on an equipment rail.

1.5.5.10 Suction tube, Shore hardness 60

The suction tube acts as the connection between the septic fluid jar and the utensil: the suction tube (1.3–3.0 m in length) must not collapse; the outer diameter of the patient side of the tube connector on the septic fluid jar must match the inner diameter of the suction tube.

1.5.6 Versions

- Gas-jet pump O_2, low flow / high vac REF HM57507540
- Gas-jet pump AIR, high flow / high vac REF HM57507542

2 Principal safety notes

2.1 Principal safety notes



DANGER!

Infection hazard due to use of oversucked filter!

Do not use oversucked hydrophobic filter. Replace oversucked hydrophobic filter.



DANGER!

Incorrect use can result in fatalities!
Instructions for using components made by other manufacturers are not part of these operating instructions.

Ensure that the manufacturer's instructions are followed.



DANGER!

UV radiation!
Exposure to UV rays can cause material fatigue. The stability would no longer be ensured.

Do not expose the product to strong UV light.



DANGER!

Fire/explosion hazard!
Air, oxygen and oxygen compounds react explosively with oils, greases and lubricants. Fire and explosion hazard due to compressed gases.

Keep product, in particular for oxygen, free of oils, greases, lubricants and hand cream. Only use lubricants which are approved by ATMOS. Observe fire protection regulations when dealing with flammable gases. Contact Technical Services about any leakages in the product.



DANGER!

Risk of fire!
Escaping oxygen increases the risk of fire.

Never smoke near equipment which carries oxygen and avoid using open fires or glowing objects. Check the connector for leaks and tight fit when mounting accessories.



DANGER!

Risk of fire!
The product may ignite if the maximum operating pressure or the maximum operating temperature is exceeded.

Do not exceed the maximum operating pressure or maximum operating temperature.



DANGER!

Health hazard!

Only use the product with central gas supply systems in accordance with DIN EN ISO 7396-1, DIN EN 737-3 or DIN 13260-1 which are equipped with an alarm facility for improper operating pressures.



DANGER!

Health hazard!

Only connect the product to compressed gas cylinders with filling level indication and pressure reducer. The humidifier can only be used in conjunction with units which are equipped with a pressure reducer in accordance with DIN EN ISO 10524-1 or DIN EN 738-1.



DANGER!

Defective device!
Using incorrect spare parts or accessories can cause injuries or equipment failure.

Only use original accessories or spare parts.



DANGER!

Health hazard!

Pay attention that the product is connected to the appropriate gas type and that the screw connection is firmly secured.



DANGER!

Danger to life!

The product is not suitable for drainage.



WARNING!

Risk of injury!

Worn or damaged products can cause injuries.

Use only products which are in perfect condition.



WARNING!

Malfunction!

Do not expose the product to torsion, as this might impair its proper function.

Mount accessories in such a way that they remain torsion-free and tension-free.



WARNING!

Ambient conditions!

If the ambient temperature range specified for shipping, operation and/or storage conditions is not maintained, then no guarantee can be assumed for the accuracy, mechanical strength or sealing of the product.



WARNING!

Configuration of the overall system!

The configuration of the overall system as well as the functional testing are subject to the overall responsibility of the medical staff. The operator must check proper functionality and suitability of the product for each intended application before every use, in particular connection parts, tightness and suitability concerning material, work pressure and flow.



WARNING!

Risk of injury!

Products which are improperly mounted can loosen and cause injuries.

Mount the product properly.



WARNING!

Vacuum gauge!

Never expose vacuum gauge to any shocks as sensitive precision components may be damaged.



WARNING!

Oversuction!

If septic fluid gets into the unit, it must be shut down immediately and then cleaned and/or repaired by authorised service personnel.



WARNING!

Risk of injury!

Hazard resulting from incorrect handling.

Follow the operating instructions for all accessories.



CAUTION!

Property damage due to oversuction!

The product may only be operated with the overflow protection in place as otherwise oversuction could occur. A hydrophobic filter offers an additional protection against oversuction, in case of oversuction it shuts off the gas supply to the product. Particles in the gaseous phase may clog the hydrophobic filter.

ATMOS offers a bacterial and viral filter which also protects the inside of the pump from entering bacteria and viruses.



WARNING!

Risk of injury!

The suction and aspiration of laser or coagulation vapours (protein-containing vapours) require the use of a flue gas filter which is appropriate for the specific application.



Report all serious incidents that have occurred in connection with this product to the manufacturer and your national competent authority.

3 Initial operation

3.1 General

DANGER!

Observe hygiene guidelines!
Contaminated components may be hazardous to the patient's health.

Prepare the product according to the hygiene guidelines before using it for the first time. Clean and disinfect the product.

DANGER!

Equipment inspection!

Only components which are in perfect condition can ensure proper functioning of the product. The components will thus have to be carefully inspected before using the unit.

NOTICE!

Property damage due to foaming!

Foam may be created when extracting secretion. Foam is detrimental to the functioning of the mechanical overflow protection. This gives rise to the risk of secretions entering and damaging the aspirator.

Always use a hydrophobic bacterial and viral filter and, if possible, a commercially available foam inhibitor.

NOTE

Refer to the manufacturer's instructions for additional information on the use of the septic fluid jar and the extraction utensil.

3.2 Equipment inspection

☒ Ensure that the thread of the oxygen gas-jet pump matches the thread of the fine regulator.

☒ Check whether the unit has been properly cleaned and that there are no residues or soiling.

☒ Do not use damaged components.

3.3 Assembly of gas-jet pump

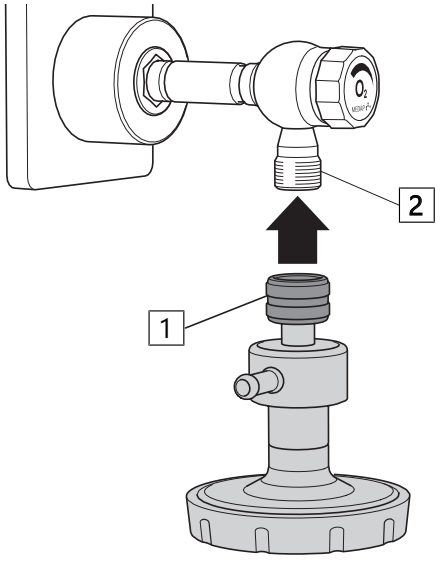

Fig. 2: Mounting the oxygen gas-jet pump

Mounting the oxygen gas-jet pump

☒ Check to ensure that a flat seal is located in the tapped hole of the cap nut (1) of the oxygen gas-jet pump.

☒ Screw the cap nut of the oxygen gas-jet pump onto outlet (2) of the fine regulator.

✓ The oxygen gas-jet pump is mounted on the fine regulator.

3.3.1 Operation with hydrophobic bacterial and viral filter

NOTE

Notes on the hydrophobic bacterial and viral filter (REF HM57520630) see operating instructions for bacterial and viral filter (REF HM57524794).

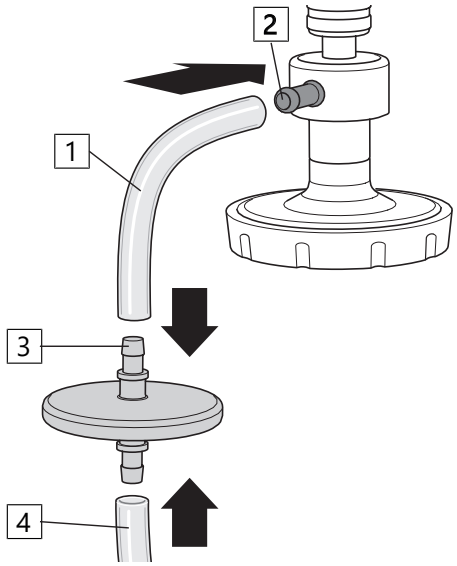

Fig. 3: Mounting the hydrophobic bacterial and viral filter

Mounting the hydrophobic bacterial and viral filter

☒ Attach the connection tube (1) to the tube connector (2) of the gas-jet pump.

☒ Attach the other end of the connection tube to the tube connector (3) of the hydrophobic bacterial and viral filter.

✓ Hydrophobic bacterial and viral filter is mounted.

☒ Connect the hydrophobic bacterial and viral filter and the septic fluid jar using a second connection tube (4).

3.3.2 Operation without a hydrophobic bacterial and viral filter

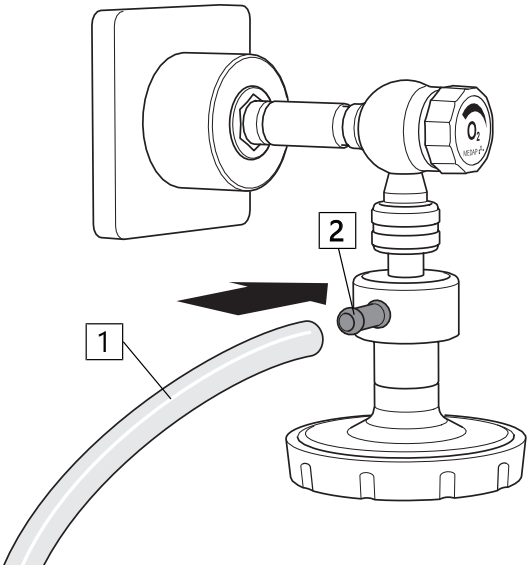

Fig. 4: Connection of septic fluid jar

Assembly of septic fluid jar with integrated overflow protection

☒ Attach the connection tube (1) to the tube connector (2) of the gas-jet pump.

☒ Attach the other end of the connection tube to the connector on the septic fluid jar.

4 Operation

WARNING!

Injury hazard if the catheter attaches itself to tissue!

Always use a fingertip so that the extraction process can be interrupted quickly by releasing the fingertip.

4.1 Gas-jet pump

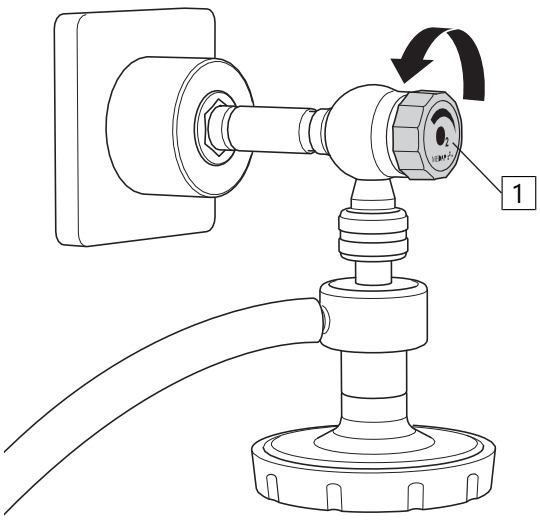

Fig. 5: Gas-jet pump

☒ Open the fine regulator (1).

4.2 Disassembly of gas-jet pump

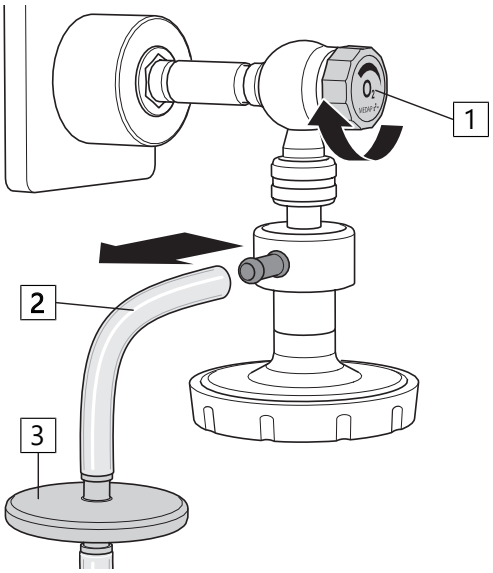

Fig. 6: Disassembling the gas-jet pump

Disassembling the gas-jet pump

☒ Close the fine regulator (1).

☒ Detach the connection tubes (2) and the hydrophobic bacterial and viral filter (3).

4.3 Replacing the bacterial filter paper

WARNING!

Hygiene!

When in use, change bacterial filter paper every day.

Dispose of used bacterial filter papers in compliance with hygiene guidelines.

WARNING!

Risk of injury!

The suction and aspiration of laser or coagulation vapours (protein-containing vapours) require the use of a flue gas filter which is appropriate for the specific application.

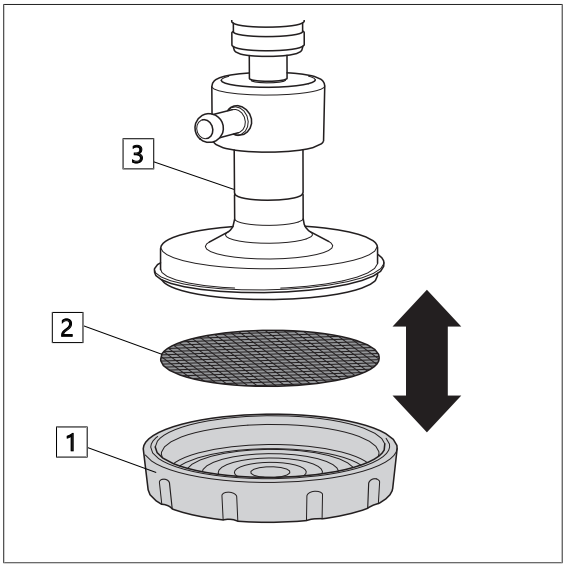

Fig. 7: Replacing the bacterial filter paper

☒ Unscrew the bacterial filter cap (1) anticlockwise.

☒ Insert the bacterial filter paper (2) into the bacterial filter cap.

✓ The finely textured side points towards the product (3).

☒ Gently screw the bacterial filter cap back on in clockwise direction.

5 Cleaning and disinfection

5.1 General

The product must be wipe or spray disinfected after every use.



DANGER!

Risk due to incorrect use of detergents and disinfectants!

It is strictly advised to observe the manufacturer's instructions regarding how to use the detergents and disinfectants as well as to observe the valid hospital hygiene rules.



DANGER!

Infection hazard!

Product may be contaminated.

Always wear gloves for cleaning and disinfection.



DANGER!

Infection hazard!

Particles of grime may become encapsulated and lead to the product not reaching the desired germ reduction after disinfection.

Before disinfection, the product must be cleaned thoroughly of contamination and encapsulated particles of grime.



CAUTION!

Improper cleaning and disinfection can cause property damage!

Do **not** use the following products for cleaning and disinfection:

- Products containing alcohol (e.g. hand disinfectants)
- Halogenides (e.g. fluorides, chlorides, bromides, iodides)
- Dehalogenating compounds (e.g. fluorine, chlorine, bromine, iodine)
- Products that may scratch the surface (e.g. scouring agents, wire brushes, wire wool)
- Standard commercial solvents (e.g. benzene, thinner)
- Water containing iron particles
- Cleaning sponges containing iron
- Products containing hydrochloric acid

Use a soft, lint-free cloth or a soft nylon brush to clean the product.



CAUTION!

Improper cleaning and disinfection can cause property damage!

Use only as much detergent and disinfectant as required.



CAUTION!

Improper cleaning and disinfection can cause property damage!

After each cleaning and disinfection process, carry out the functionality test.

5.2 Cleaning

5.2.1 General



NOTE

Use only all-purpose cleaners which are slightly alkaline (soap solution) and contain surfactants and phosphates as the active cleaning agents.

In the event of heavily contaminated surfaces, use concentrated all-purpose detergent.



CAUTION!

Improper cleaning can cause property damage!

Residues of physiological saline solutions (e.g. sodium chloride) can attack the surfaces of the product.

Remove residues of physiological saline solutions with a cloth dipped in clean water. Then dry the product with a dry, lint-free cloth.



CAUTION!

Improper cleaning can cause property damage!

Do not spray cleaning agent directly into the joints or gaps and never use a high-pressure cleaning unit!

5.2.2 Cleaning procedure

☒ Use the correct dose of all-purpose detergent with water for the degree of surface contamination and in accordance with the instructions of the detergent manufacturer.

☒ Thoroughly wipe off the product with a soft cloth slightly dampened in an all-purpose detergent solution.

☒ Ensure that the product is free from contamination and encapsulated particles of grime.

☒ Thoroughly wipe off the product with a soft cloth dipped in clean water.

☒ Ensure that the product is free of detergent residues.

☒ Dry the product with a dry, absorbent and lint-free cloth.

✓ This will help to reduce pathogen growth on the product's surface.

☒ Wipe disinfect the product after every cleaning process.

5.3 Disinfection

5.3.1 General



NOTE

In the event that product surfaces are very dirty, carry out an additional cleaning procedure before disinfecting.



DANGER!

Reduced performance!

Only clean the product by manual disinfection.

Ensure that no disinfectants enter the unit.

Check the functionality of the product after each disinfection.

CAUTION!

Material damage due to excessive exposure times!

Exceeding the specified exposure time of the disinfectant may damage the surfaces.

Observe the specified exposure time of the disinfectant manufacturer.

5.3.2 Suitable disinfectants

Only surface disinfectants based on the following combinations of active ingredients may be used for disinfection:

- Aldehydes
- Quaternary ammonium compounds
- Guanidine derivatives

Ingredient group	Active ingredients
Aldehydes	2-ethyl-1-hexanal, formaldehyde, glutardialdehyde, glyoxal, o-phthaldialdehyde, succinaldehyde
Quaternary ammonium compounds	Alkyl-didecyl-polyoxyethyl ammonium propionate, alkyl-dimethyl-alkylbenzyl ammonium chloride, alkyl-dimethyl-ethyl ammonium chloride, alkyl-dimethyl-ethylbenzyl ammonium chloride, benzalkonium propionate, benzalkonium chloride (alkyl-dimethyl-benzyl ammonium chloride, cocos-dimethyl-benzyl ammonium chloride, lauryl-dimethyl-benzyl ammonium chloride, myristyl-dimethyl-benzyl ammonium chloride), benzethonium chloride, benzyl-dihydroxyethyl-cocos-alkyl ammonium chloride, dialkyl-dimethyl ammonium chloride (didecyldimethyl ammonium chloride), didecyl-methyl-oxyethyl ammonium propionate, mecetronium-ethyl sulphate, methyl-benzethonium chloride, n-octyl-dimethyl-benzyl ammonium chloride
Guanidine derivatives.	Alkyl-biguanide, chlorhexidine-digluconate, cocospropylene-diamine guanidinium diacetate, oligomeric biguanide, polyhexamethylene biguanide hydrochloride (oligo-diimino imido-carbonyl imino-hexamethylene, polyhexanide)

Tab. 5: Active ingredients of disinfectants

5.3.3 Disinfection procedure

☒ Wipe disinfect the product in accordance with the instructions of the disinfectant manufacturer after every cleaning process.

☒ Ensure that the product is free of disinfectant residue.

☒ Perform visual and functional inspections.

5.3.4 Disinfection procedures

Different disinfection procedures may be used for the various components, depending on the properties of the materials. Before disinfection remove contaminations and residues from the parts and dry well.

Components	In solution[1]	Wiping[2]
Gas-jet pump		X
Bacterial filter cap		X
Bacterial filter paper	Disposable product. When in use, must be replaced daily.	

[1] After exposure (as prescribed in the manufacturer's instructions), rinse components thoroughly with water and dry them afterwards.

[2]After exposure (as prescribed in the manufacturer's instructions), remove disinfectant residues from the components using a moist cloth and dry them afterwards.

Tab. 6: Disinfection procedures

5.4 Product-specific safety notes



DANGER!

Health hazard!

The product may not be disassembled for cleaning or disinfection. During cleaning and disinfection, pay attention to ensure that no cleaning agent, disinfectant or other contamination is able to enter the product.



DANGER!

Risk to patient!

Oversuction of products results in them no longer being functional. There is considerable risk to the patient if the tapping unit is not cleaned properly after being exposed to oversuction, as safety equipment could be clogged.

After oversuction, products must be dismantled and cleaned thoroughly by authorised service staff.



CAUTION!

Property damage due to sterilisation!

Do not sterilise the product.



CAUTION!

Property damage!

Using non-colour-fast surgical drapes can cause discolouration of surfaces.

Only use colour-fast surgical drapes.



NOTE

For the cleaning and disinfection of versions B and C, disconnect the connection tube with the NIST screw connection from the tapping unit.

6 Maintenance

6.1 General

Maintenance, repairs and periodic tests may only be carried out by persons who have the appropriate technical knowledge and are familiar with the product. To carry out these measures, the person must have the necessary test devices and original spare parts.

ATMOS recommends: work should be carried out by an authorised ATMOS service partner. This ensures that repairs and testing are carried out professionally, original spare parts are used and warranty claims remain unaffected.



DANGER!

Defective device!
Using incorrect spare parts or accessories can cause injuries or equipment failure.

Only use original accessories or spare parts.



DANGER!

Health hazard!
The product is used in the treatment of patients. The product or some of its components may be contaminated.

Clean and disinfect the product before maintenance and repair. Repair work may be performed by personnel authorised by ATMOS.

6.2 Periodic tests

Observe the country-specific requirements regarding periodic tests.

6.3 Malfunctions and troubleshooting

Defect	Source of malfunction	Corrective actions
• No or low vacuum • No or reduced displacement	Oxygen gas-jet pump not connected	Attach oxygen gas-jet pump in accordance with the operating instructions
	Connection tube not connected to the oxygen gas-jet pump	Connect connection tube according to operating instructions
	Connection tube too long	Shorten connection tube to a maximum length of 50 cm
	Connection tube collapses	Use special connection tube (vacuum proof up to –95kPa)
	Full septic fluid jar, overflow protection system closed	Empty/replace septic fluid jar, replace overflow protection system
	Oversuction of hydrophobic bacterial and viral filter	Replace hydrophobic bacterial and viral filter
	Seal damaged	Replace seal
	Suction system is leaking	Check suction system
	Fine regulator not open	Open the fine regulator

Defect	Source of malfunction	Corrective actions
	Central supply system failure	Contact technical service
	Fine regulator defective	
	Adjusting screw on fine regulator defective	
Device oversuction	No overflow protection device used	Contact technical service
The oxygen gas-jet pump is leaking	Seal is missing or defective	Have oxygen gas-jet pump inspected
	There is a leak in the housing	
	Accessories are not tightened	Check fit of accessories

Tab. 7: Corrective actions

6.4 Repairs

The following may require repairs by the manufacturer or an authorised service partner:

- Liquid has penetrated the device.
- The performance has significantly decreased.
- Inexplicable notifications appear.
- Abnormal noises occur.
- Functional faults cannot be rectified according to the measures in chapter Malfunctions and troubleshooting [⏩ page 24].

If defects are detected the product may not be used any longer.

Make a note of the defects and the REF number on the type plate and inform your ATMOS representative.

Observe the information in chapter Sending in the device [⏩ page 25].

6.5 Service hotline

+49 7653 689-0

6.6 Sending in the device

☒ Remove and properly dispose of consumables.

☒ Clean and disinfect the product and accessories according to the operating instructions.

☒ Place used accessories with the product.

☒ Fill in the form QD 434 ‘Delivery complaint / return shipment’ and the respective **decontamination certificate**.

This form is enclosed with each delivery and can be found at www.atmosmed.com.

☒ The device must be well padded and packed in suitable packaging.

☒ Place the form QD 434 ‘Delivery complaint / return shipment’ and the respective **decontamination certificate** in an envelope.

☒ Affix the envelope to the outside of the package.

☒ Send the product to ATMOS or to your dealer.

7 Technical specifications

7.1 General

Classification as per Annex IX of Directive 93/42/EEC	Class IIa
Rated operating pressure	500 kPa* ± 10%
Flow rate** (high flow)	32 l/min
Flow rate** (low flow)	12 l/min
Connection thread O2	G 3/8"
AIR connection thread	M 18x1
Maximum vacuum	−80 kPa*
Excess pressure equipment	< 1 kPa
Pore width of outlet filter	0.3 µm
Performance class	HF/HV (High Flow / High Vac) LF/HV (Low Flow / High Vac)

* 100 kPa = 1 bar = 1000 mbar = 750 mmHg

** in accordance with EN 10079-3. Depending on the design of the gas supply system, the actual performance of the tapping fittings may be reduced.

7.2 Ambient conditions

Temperature	−15 °C to +50 °C (shipping)
	+10 °C to +40 °C (operation)
Relative humidity	less than 100% (shipping)
	30% to 75% (operation)
Atmospheric pressure	700 hPa to 1060 hPa (shipping)
	700 hPa to 1060 hPa (operation)

7.3 Dimensions and weight

Dimensions (L x W x H)	90 x 100 x 80 mm
Weight	325 g

8 Accessories

8.1 Accessories

The following accessories are not part of the scope of delivery and must be ordered separately:

FINA fine regulator O2	HM57523705
FINA Fine regulator AIR	HM57523708 / HM57523709

Tab. 8: Accessories

8.2 Consumables

Hydrophobic bacterial and viral filter (disposable)	HM57500630
Fingertip	000.0347.0
Bacterial filter paper	HM57505045

Tab. 9: Consumables

MEDAP

Manufacturer:

ATMOS
MedizinTechnik GmbH & Co. KG
Ludwig-Kegel-Str. 16
79853 Lenzkirch
GERMANY
Telephone: +49 7653 689-0
www.atmosmed.com