Ohr- und Nasenpinzetten
Ear and nose dressing forceps
Pinces auricolaires et nasaux
Pinzas auriculares y nasales
Pinze auricolari e nasali



Troeltsch

150 mm – 6"	**tk 11615-15**
180 mm – 7"	**tk 11617-18**

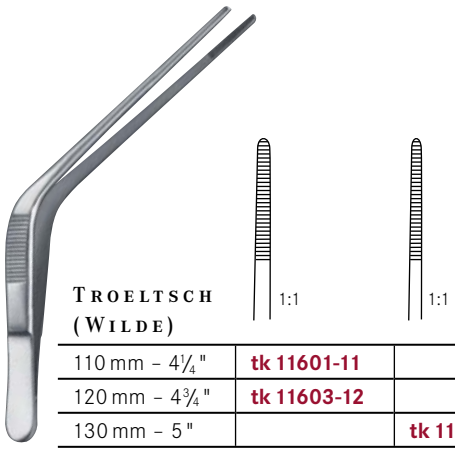

Troeltsch (Wilde)

110 mm – 4¼"	**tk 11601-11**	
120 mm – 4¾"	**tk 11603-12**	
130 mm – 5"		**tk 11608-13**

gekreuzt
cross action
croisé
cruzado
crociato

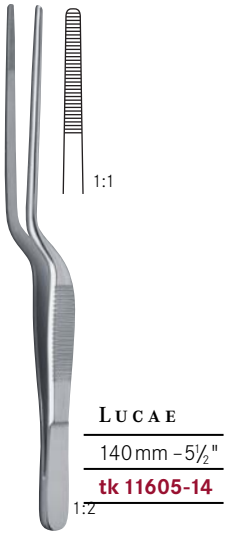

Lucae

140 mm – 5½"
tk 11605-14



Jansen

160 mm – 6¼"
tk 11609-16



Jansen

160 mm – 6¼"	**tk 11607-16**
200 mm – 8"	**tk 11607-20**



Cottle

145 mm – 5¾"
tk 11629-14



105 mm – 4¼"
tk 11635-10

Columella Pinzette
Columella forceps
Pince à columella
Pinza para columella
Pinze per columella