Arterienklemmen
Haemostatic forceps
Pinces hémostatiques
Pinzas hemostáticas
Pinze emostatiche

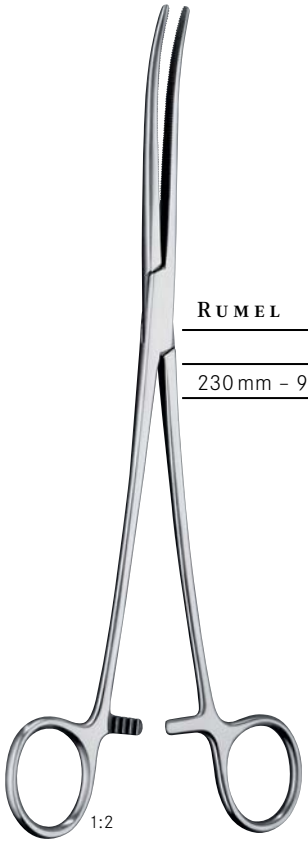

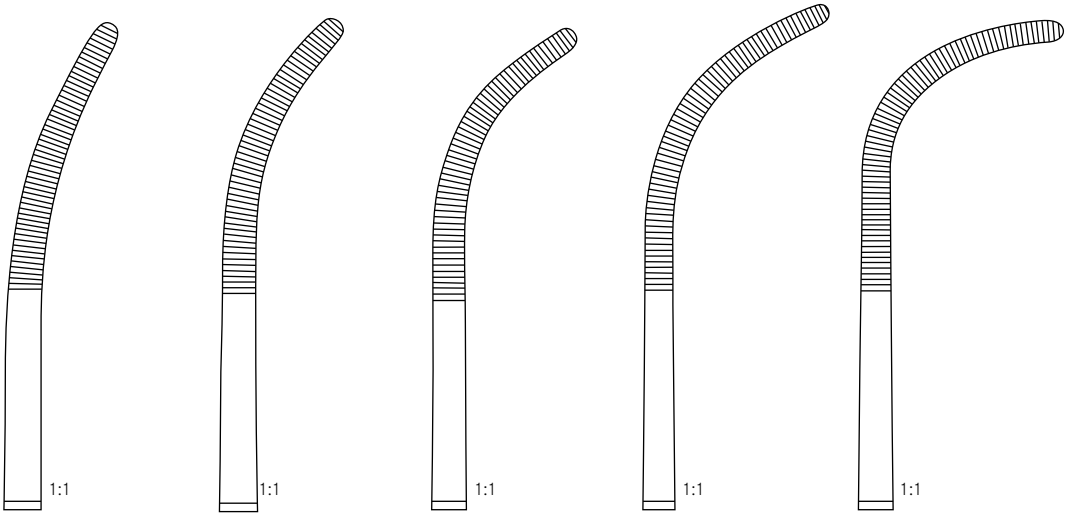

RUMEL

	Fig. 1	Fig. 2	Fig. 3	Fig. 4	Fig. 5
230 mm – 9"	**tk 12261-23**	**tk 12262-23**	**tk 12263-23**	**tk 12264-23**	**tk 12265-23**

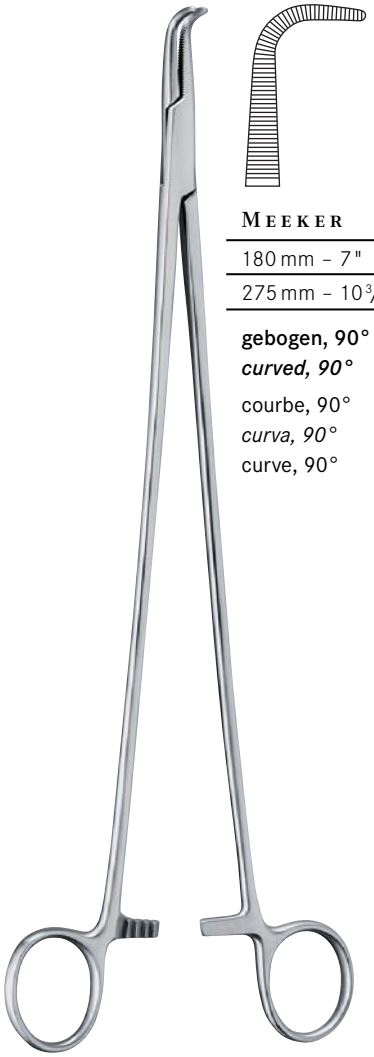

MEEKER

180 mm – 7"	**tk 12091-18**
275 mm – 10¾"	**tk 12091-27**

gebogen, 90°
curved, 90°
courbe, 90°
curva, 90°
curve, 90°



LAWRENCE

280 mm – 11"
tk 12093-28