Gefäßklemmen
Vascular forceps

Pinces vasculaires
Pinzas vasculares
Pinze vascolari

ATRAUMTK



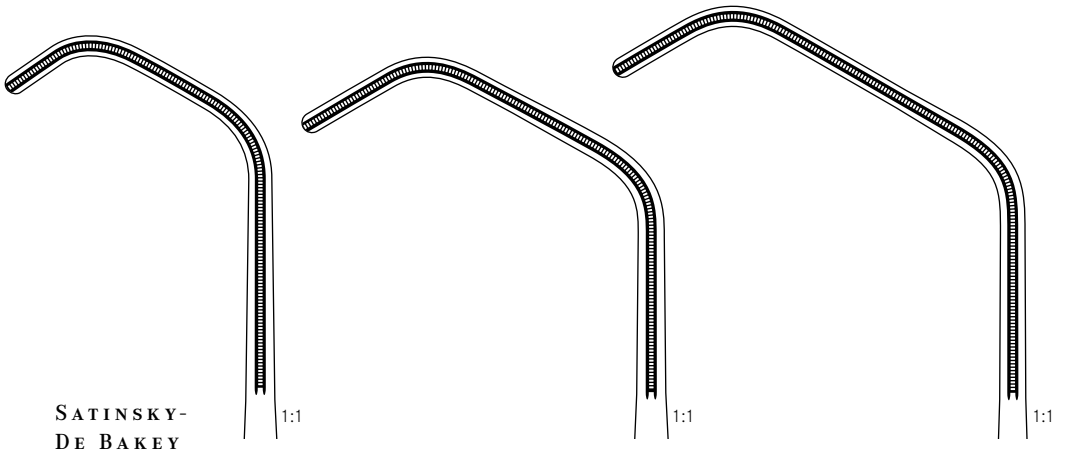

SATINSKY-
DE BAKEY

205 mm – 8"	240 mm – 9¾"	250 mm – 10"
tk 22125-20	**tk 22125-24**	**tk 22125-25**

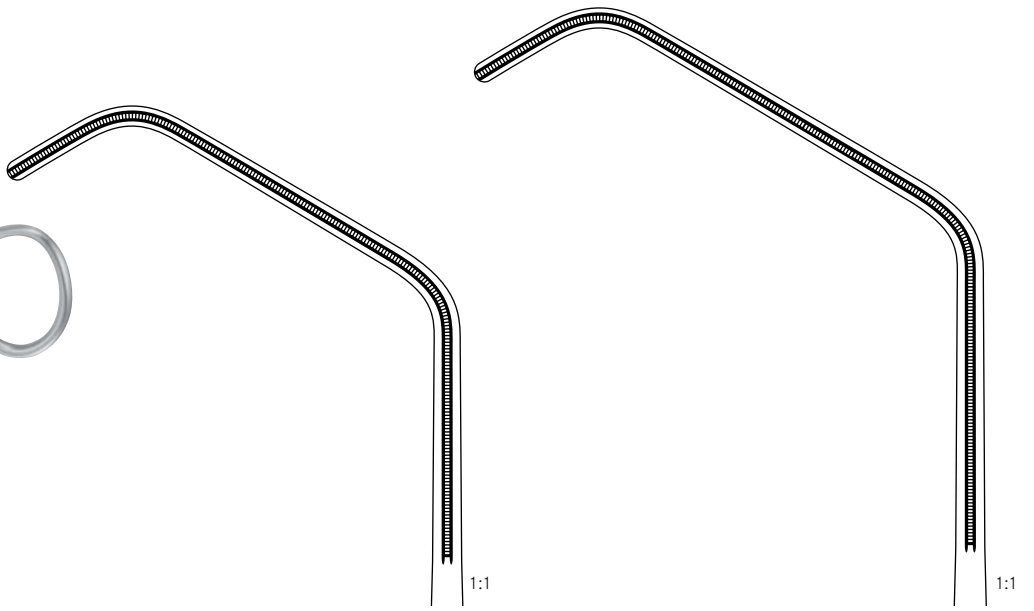

265 mm – 10½"	275 mm – 10¾"
tk 22125-26	**tk 22125-27**