Gefäßklemmen
Vascular forceps
Pinces vasculaires
Pinzas vasculares
Pinze vascolari



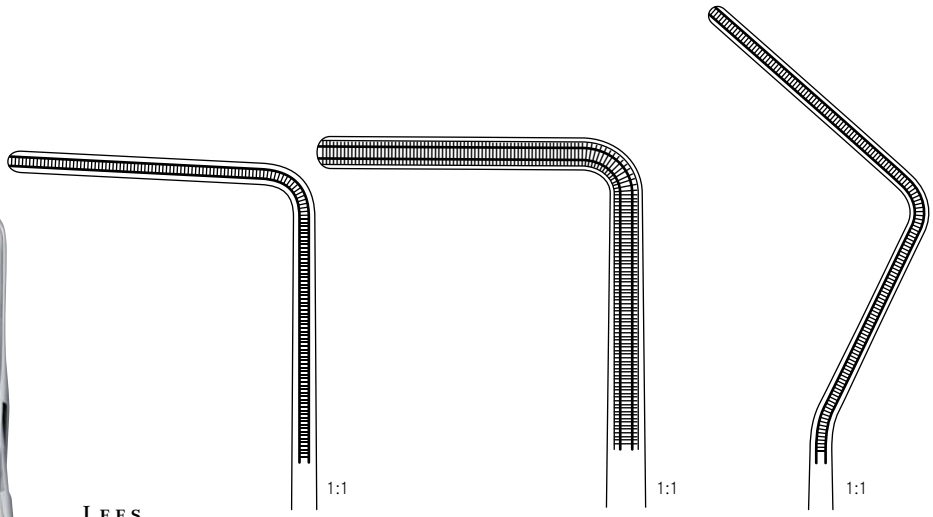

LEES

230 mm – 9"	250 mm – 9¾"	250 mm – 9¾"
tk 22128-23	**tk 22128-25**	**tk 22129-25**