Gefäßklemmen
Vascular forceps

Pinces vasculaires
Pinzas vasculares
Pinze vascolari

ATRAUMTK



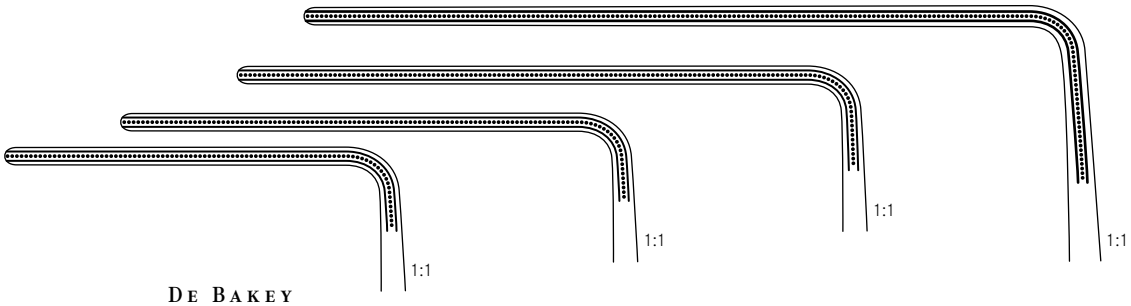

DE BAKEY

180 mm – 7"	190 mm – 7½"	230 mm – 9"	270 mm – 10¾"
tk 22110-18	**tk 22110-19**	**tk 22110-23**	**tk 22110-27**

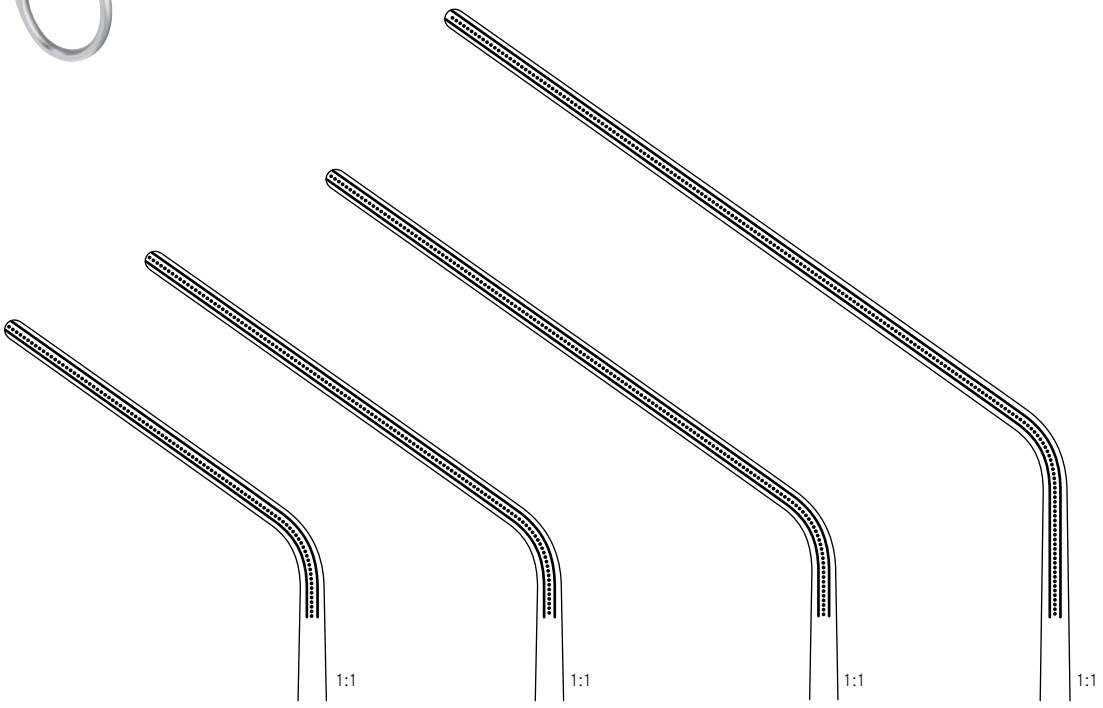

200 mm – 8"	210 mm – 8¼"	250 mm – 9¾"	300 mm – 12"
tk 22112-20	**tk 22112-21**	**tk 22112-25**	**tk 22112-29**