Gefäßklemmen
Vascular forceps
Pinces vasculaires
Pinzas vasculares
Pinze vascolari

ATRAUMTK



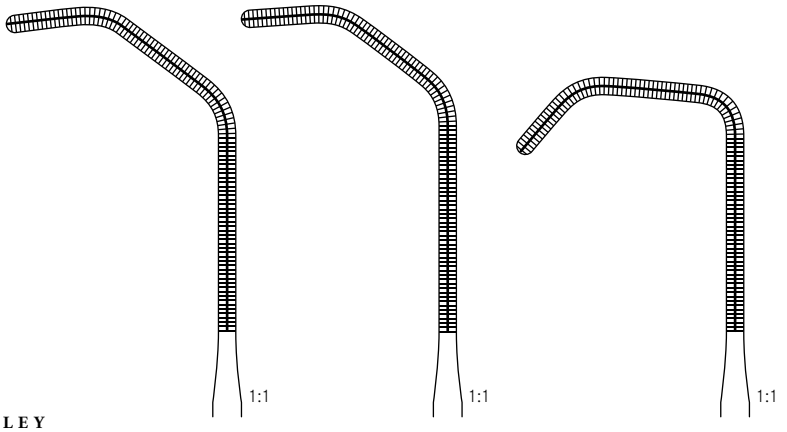

COOLEY

175 mm – 7"	175 mm – 7"	165 mm – 6½"
tk 22565-17	tk 22566-17	tk 22567-01

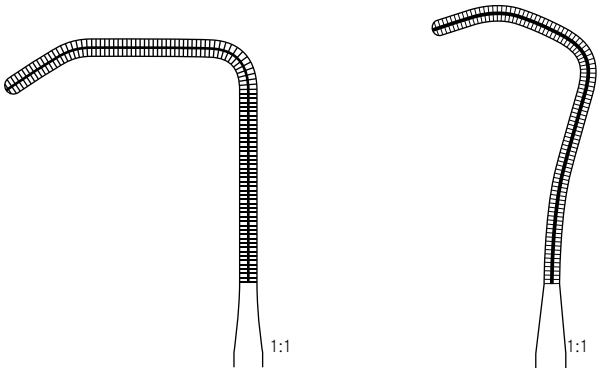

165 mm – 6½"	170 mm – 6¾"
tk 22567-02	tk 22508-16



COOLEY-DERRA

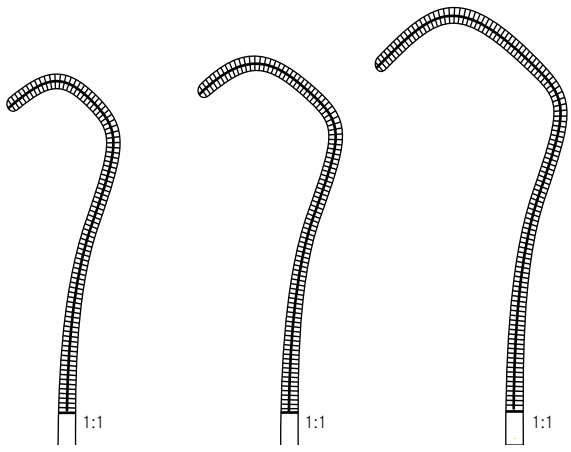

165 mm – 6½"	170 mm – 6¾"	175 mm – 7"
tk 22515-16	tk 22515-17	tk 22515-18