Gefäßklemmen
Vascular forceps
Pinces vasculaires
Pinzas vasculares
Pinze vascolari

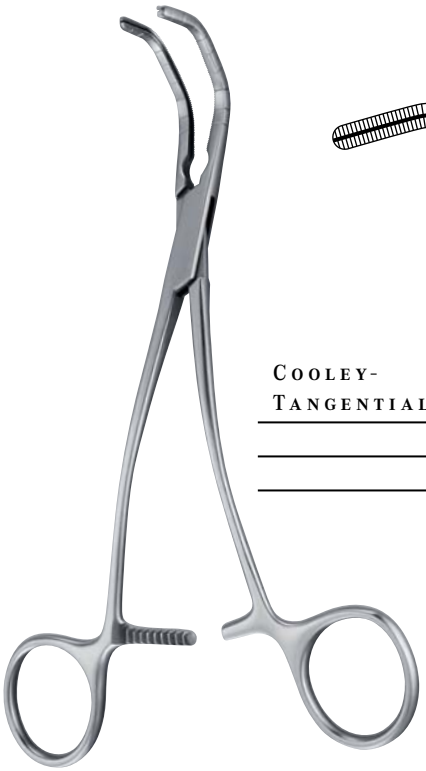

COOLEY-TANGENTIAL

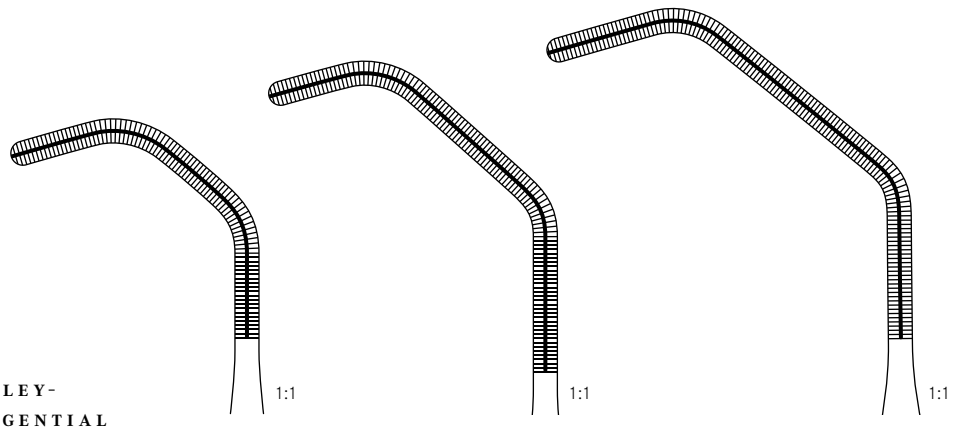

195 mm – 7¾"	255 mm – 10"	260 mm – 10¼"
tk 22550-19	**tk 22550-25**	**tk 22550-26**

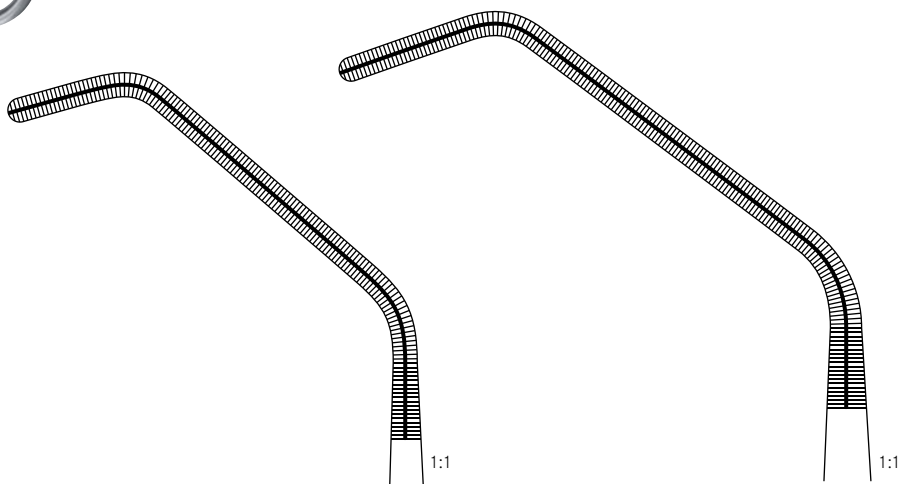

265 mm – 10½"	270 mm – 10¾"
tk 22550-27	**tk 22550-28**