Nervenhaken
Nerve hooks
Crochets à nerfs
Ganchos para nervios
Uncini per nervi



SACHS

185 mm – 7¼"
tk 25305-18

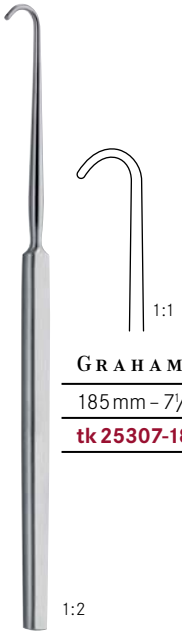

GRAHAM

185 mm – 7¼"
tk 25307-18

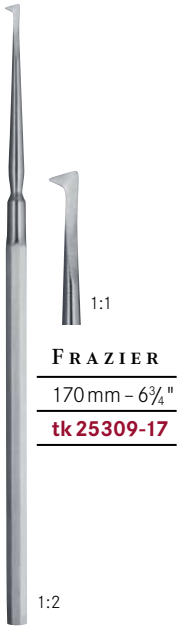

FRAZIER

170 mm – 6¾"
tk 25309-17

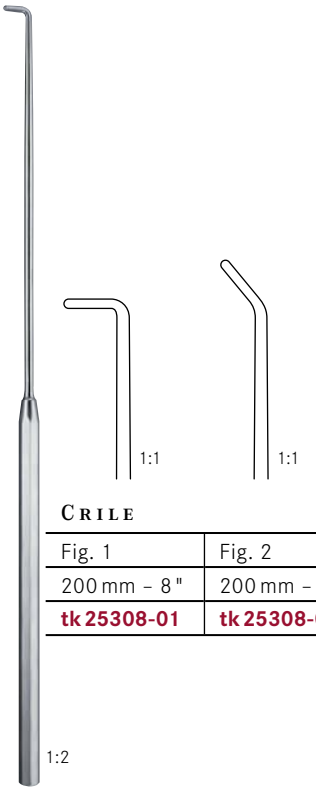

CRILE

Fig. 1	Fig. 2
200 mm – 8"	200 mm – 8"
tk 25308-01	**tk 25308-02**



TOENNIS

150 mm – 6"
tk 25310-15



DANDY

200 mm – 8"	**tk 25315-20**	**tk 25316-20**	**tk 25317-20**



ADSON

200 mm – 8"	**tk 25320-20**	**tk 25321-20**