Mastdarm-Biopsiezangen
Rectal biopsy forceps
Pinces pour la biopsie rectale
Pinzas para biopsia rectal
Pinze taglienti per biopsia rettale

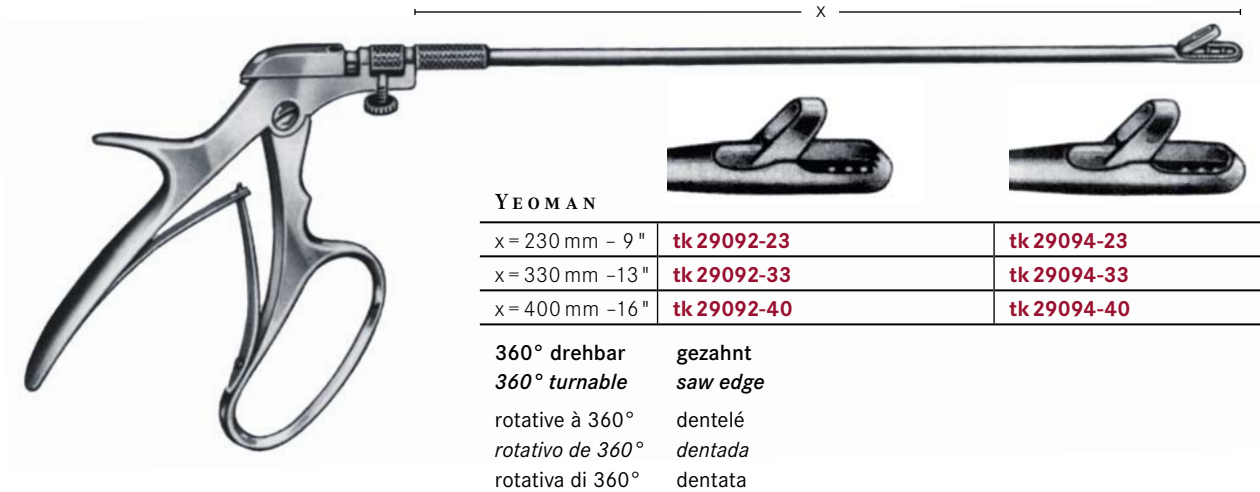

YEOMAN

x = 230 mm – 9"	**tk 29092-23**	**tk 29094-23**
x = 330 mm –13"	**tk 29092-33**	**tk 29094-33**
x = 400 mm –16"	**tk 29092-40**	**tk 29094-40**

360° drehbar **gezahnt**
360° turnable ***saw edge***
rotative à 360° dentelé
rotativo de 360° *dentada*
rotativa di 360° dentata



TURREL

x = 230 mm – 9"	**tk 29096-23**	**tk 29098-23**
x = 330 mm –13"	**tk 29096-33**	**tk 29098-33**
x = 400 mm –16"	**tk 29096-40**	**tk 29098-40**

360° drehbar **gezahnt**
360° turnable ***saw edge***
rotative à 360° dentelé
rotativo de 360° *dentada*
rotativa di 360° dentata

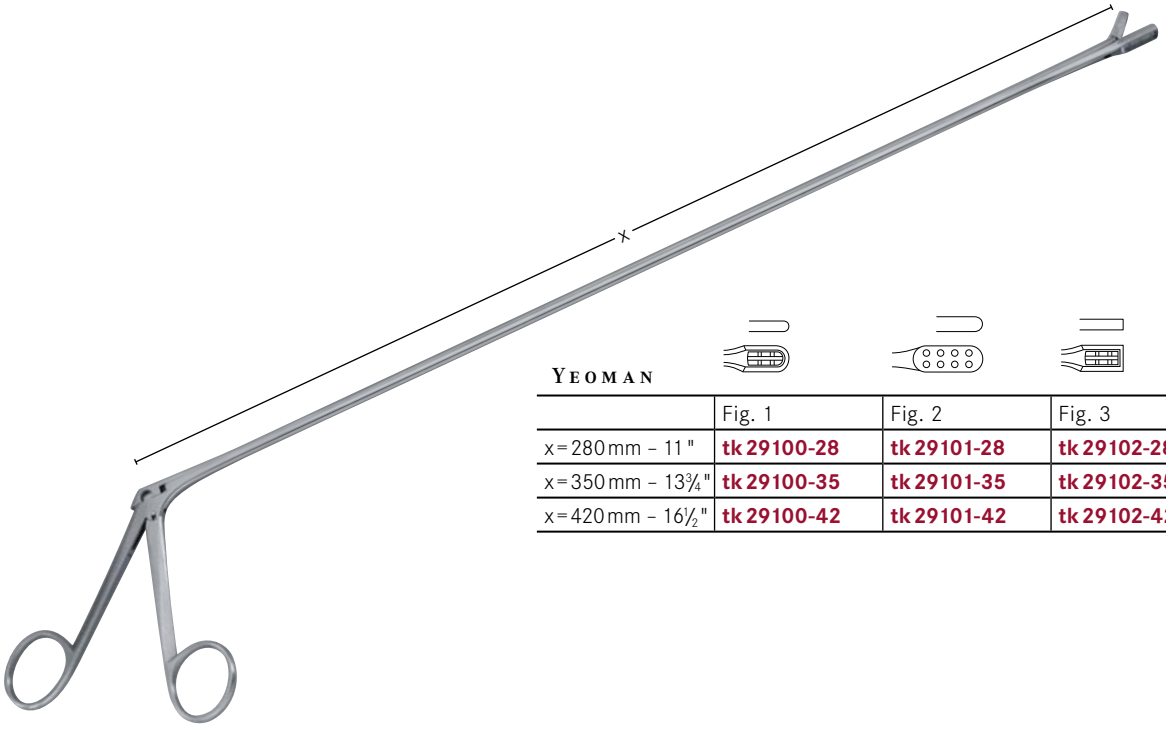

YEOMAN

	Fig. 1	Fig. 2	Fig. 3	Fig. 4
x = 280 mm – 11"	**tk 29100-28**	**tk 29101-28**	**tk 29102-28**	**tk 29103-28**
x = 350 mm – 13¾"	**tk 29100-35**	**tk 29101-35**	**tk 29102-35**	**tk 29103-35**
x = 420 mm – 16½"	**tk 29100-42**	**tk 29101-42**	**tk 29102-42**	**tk 29103-42**