Gefäßscheren
Artery scissors
Ciseaux vasculaires
Tijeras vasculares
Forbici vascolari



Favaloro

150 mm – 6"
tk 8740-15



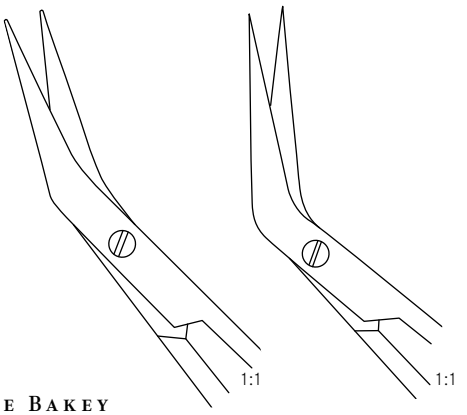

De Bakey

155 mm – 6"	**tk 8741-15**	**tk 8742-15**

Offset-Schere, S-förmig
Offset scissors, s-shaped
Ciseaux offset, courbes en S
Tijera offset, curva en S
Forbici offset, curve a forma di S



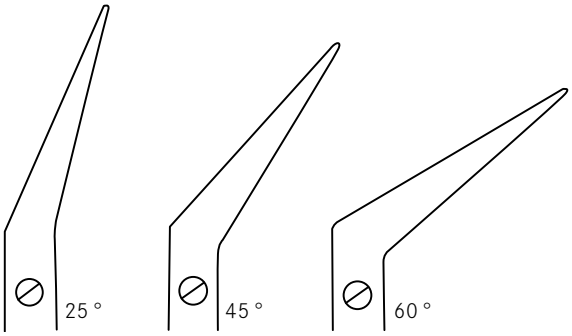

De Bakey

160 mm – 6¼"	**tk 8745-16**	**tk 8746-16**	**tk 8747-16**
230 mm – 9"	**tk 8745-23**	**tk 8746-23**	**tk 8747-23**
280 mm – 11"	**tk 8745-28**	**tk 8746-28**	**tk 8747-28**



Mills

225 mm – 8¾"
tk 8744-22